75 Emerson Condominiums

Located in the Southwest 1/4 of Section 11,
Township 4 South, Range 68 West of the 6th P.M.,
City and County of Denver, State of Colorado.

FIRST FLOOR

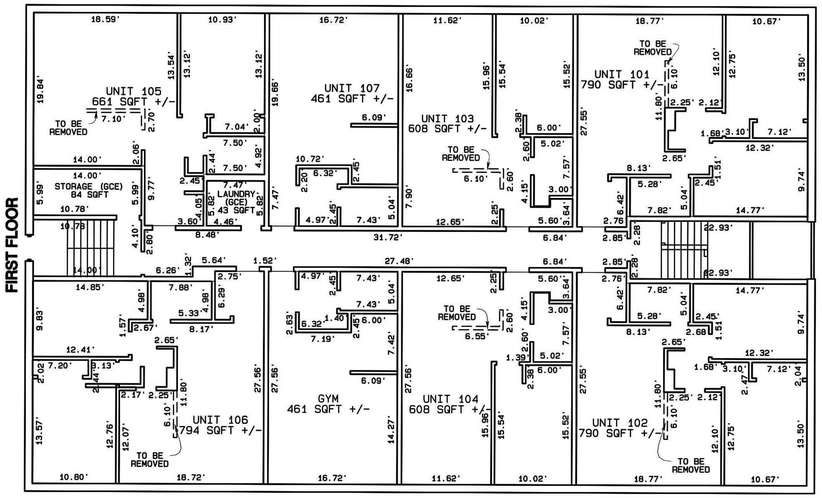

SECOND FLOOR

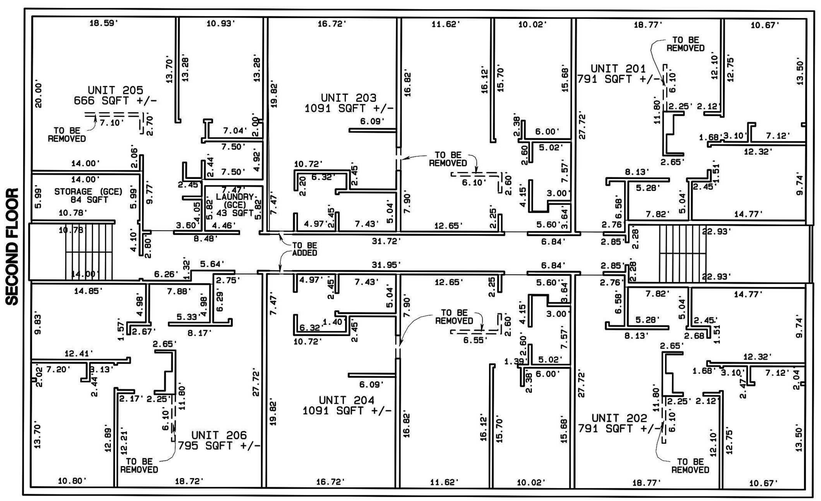

THIRD FLOOR

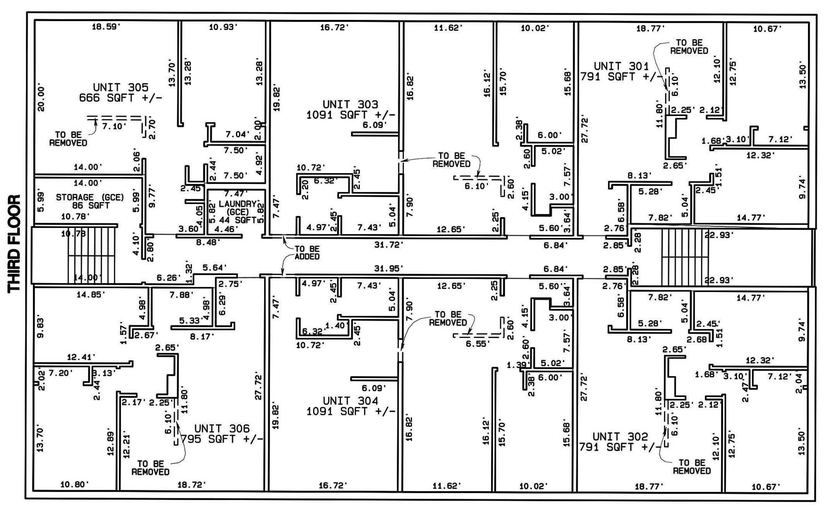

ROOF

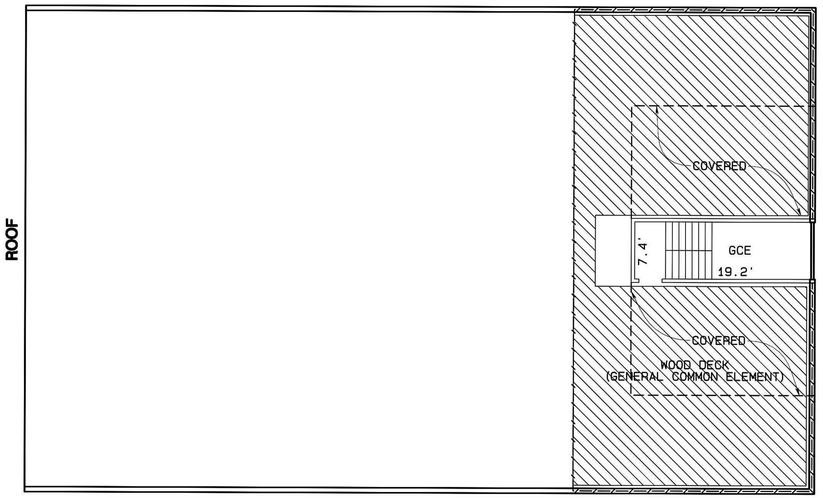

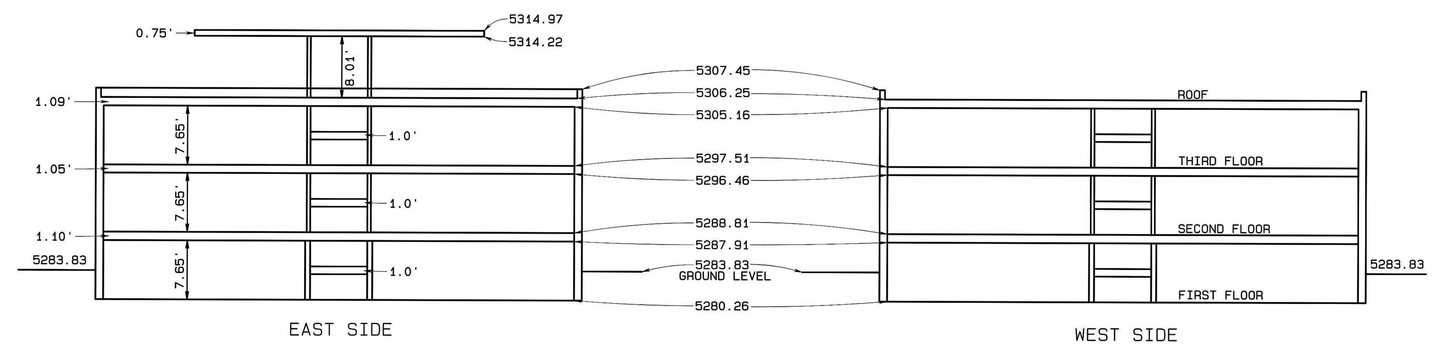

EAST SIDE

WEST SIDE

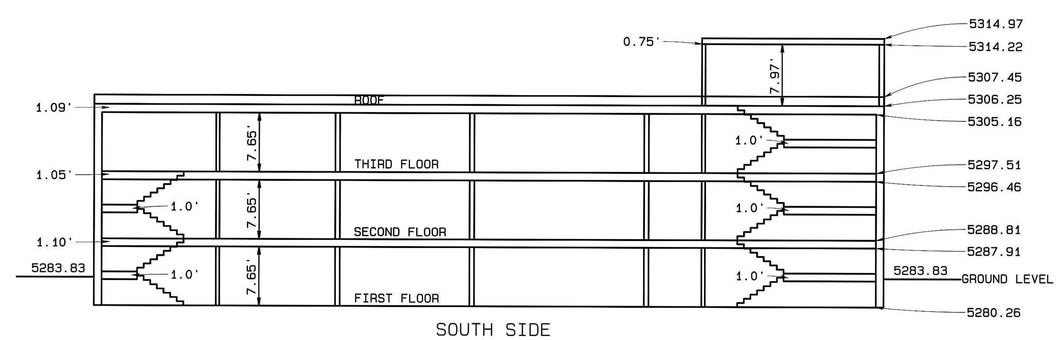

SOUTH SIDE

SURVEYOR'S [illegible]

[illegible] CO.,